comnet
Communication Networks

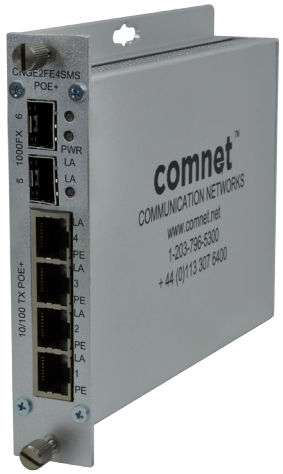

INSTALLATION AND OPERATION MANUAL

CNGE2FE4SMS[POE][HO]

10/100/1000 MBPS DROP/INSERT/REPEAT GIGABIT UPLINK SWITCH WITH OPTIONAL POE+

The ComNet CNGE2FE4SMS[POE][HO] is a six-port self-managed switch with uplink management functionality and provides 4 copper ports operating at 10/100 Mbps and two Gbps optical SFP ports. It is designed to combine four electrical ports and one Gbps SFP port into one optical SFP port. The CNGE2FE4SMS[POE][HO] SFP ports forwards this data to the next network device or can be configured for drop and insert operation. The CNGE2FE4SMS[POE][HO] uses ComNet SFPs for connector and distance options. There is no programming required to use this product. The ComNet CNGE2FE4SMS[POE][HO] comes pre-programmed, preventing network video flooding with dip switch selection of fiber port 6 as uplink or as an unmanaged switch. Ports 1 to 4 can supply up to thirty (30) watts of power ("Power over Ethernet") per port based on the IEEE 802.3at standard. An optional High Output (HO) version is also available that can supply up to thirty (30) watts of PoE from ports 1 and 2 and up to sixty (60) watts of PoE from ports 3 and 4.

Indicating LEDs confirm the operating status of this device. See **Figure 8** on **Page 5** for an explanation of the indicators.

The ComNet CNGE2FE4SMS[POE][HO] may be either wall mounted, rack mounted ("ComFit" packaging) or DIN-rail mounted with the use of the ComNet DINBKT4 adapter. See **Figure A** on **Page 6** for mounting instructions.

See **Figures 1 – 9** for complete installation details.

FIGURE 1 – CNGE2FE4SMS

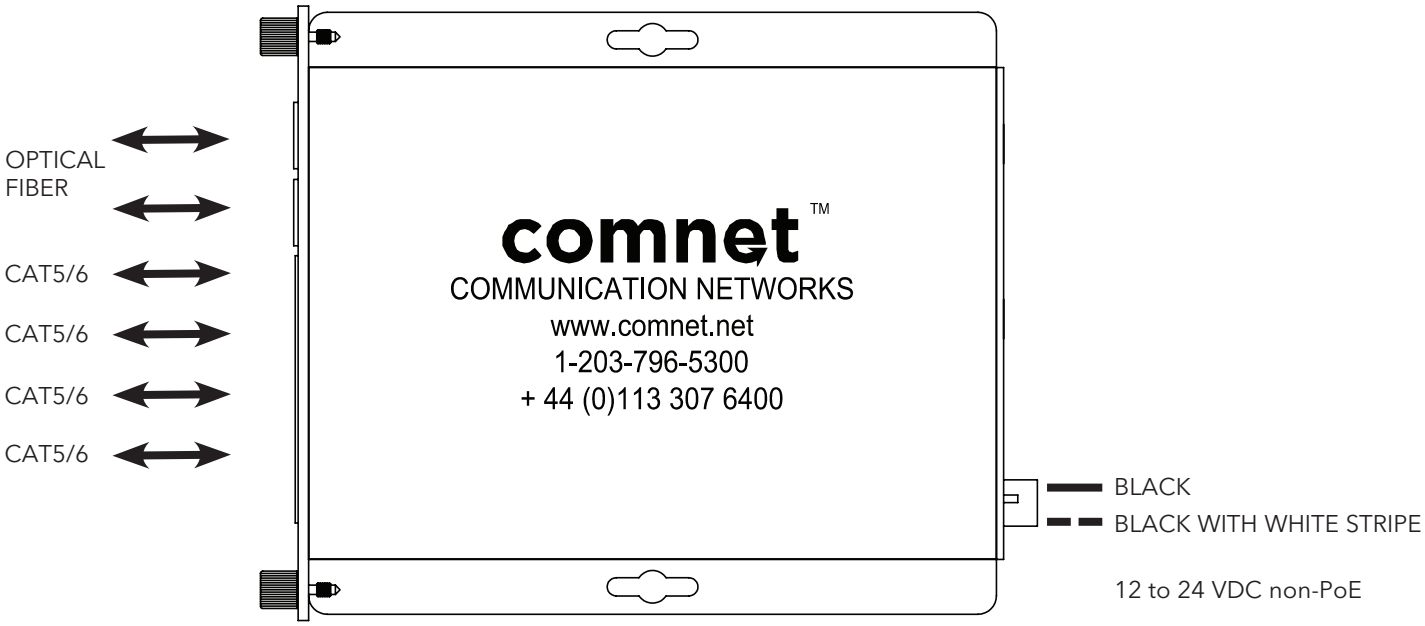

FIGURE 2 – CNGE2FE4SMS

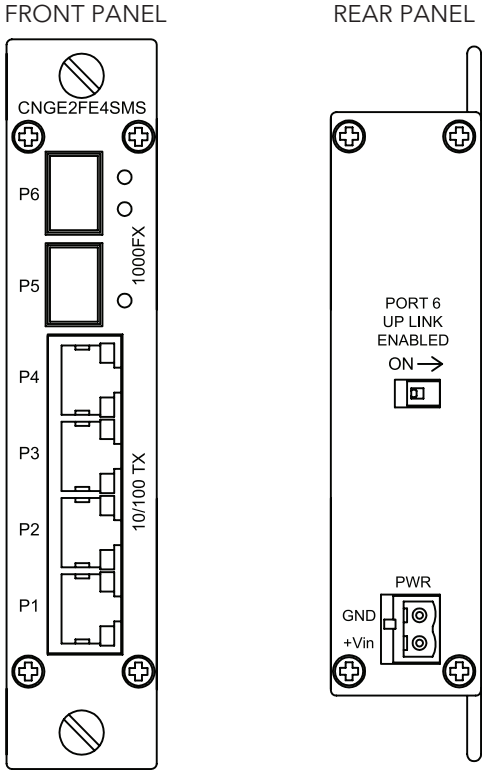

FIGURE 3 – CNGE2FE4SMSPOE

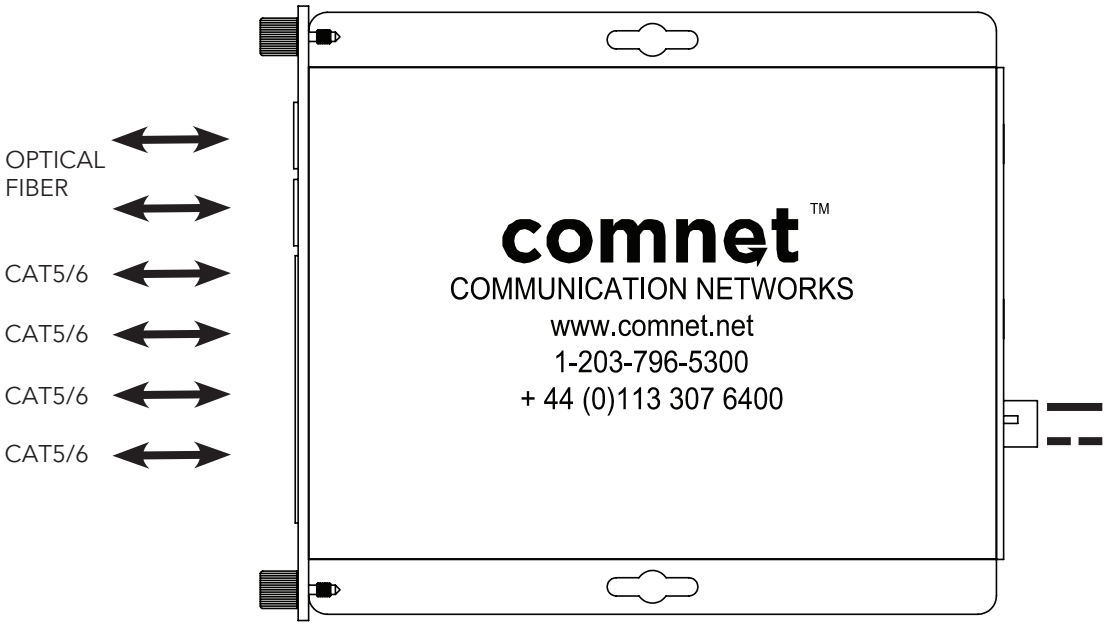

NOTE:
The units may be mounted inside a ComNet rack, but they must be powered by an external 48VDC PSU.

48 to 57 VDC PoE
Recommended Power Supply:
ComNet PS48VDC-5ADIN

FIGURE 4 – CNGE2FE4SMSPOE

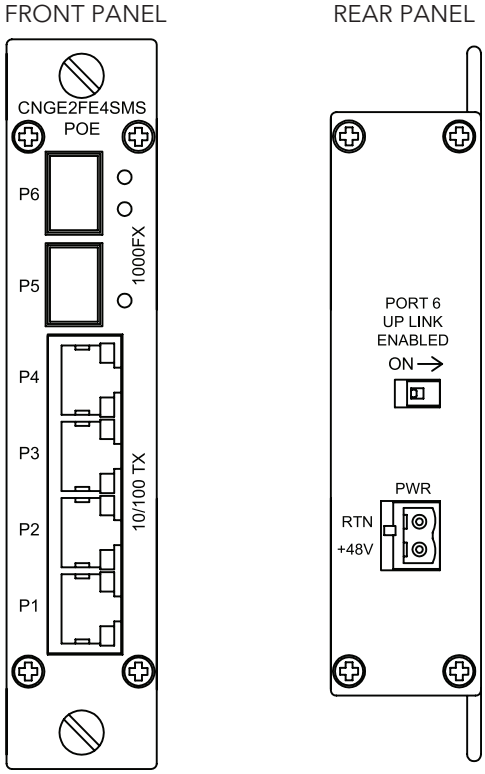

FIGURE 5 – CNGE2FE4SMSPOEHO

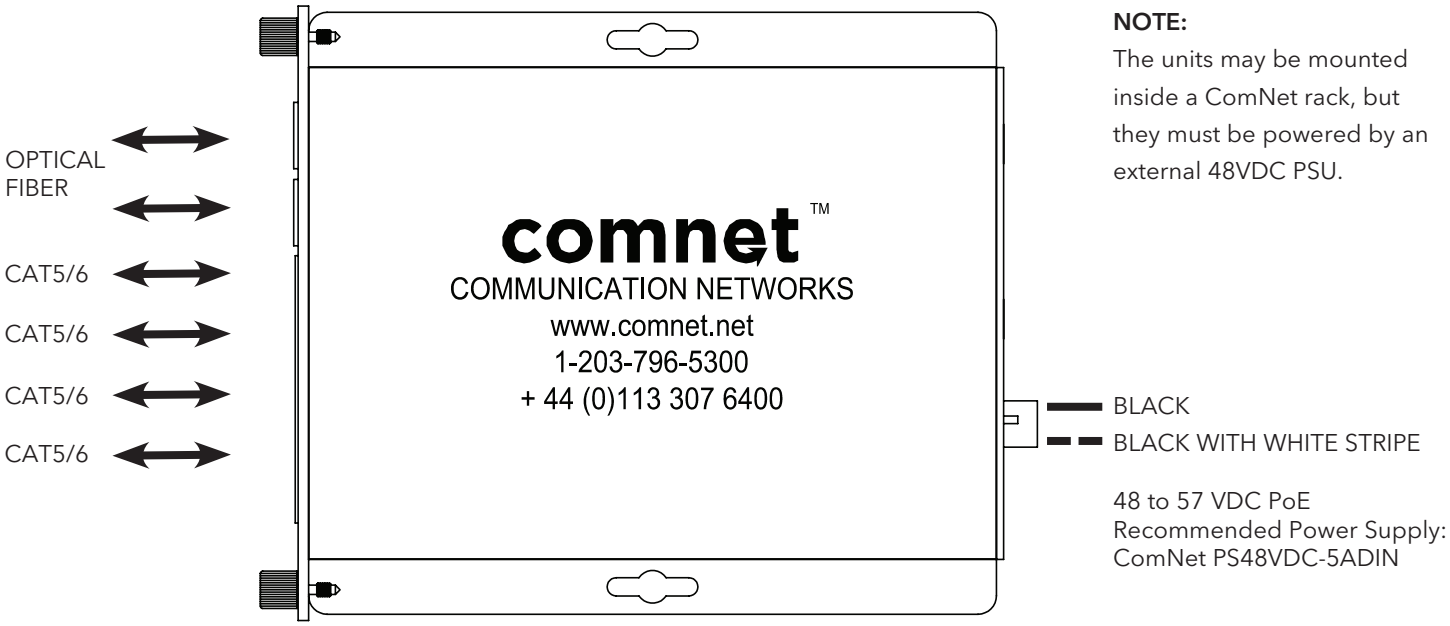

NOTE:
The units may be mounted inside a ComNet rack, but they must be powered by an external 48VDC PSU.

FIGURE 6 – CNGE2FE4SMSPOEHO

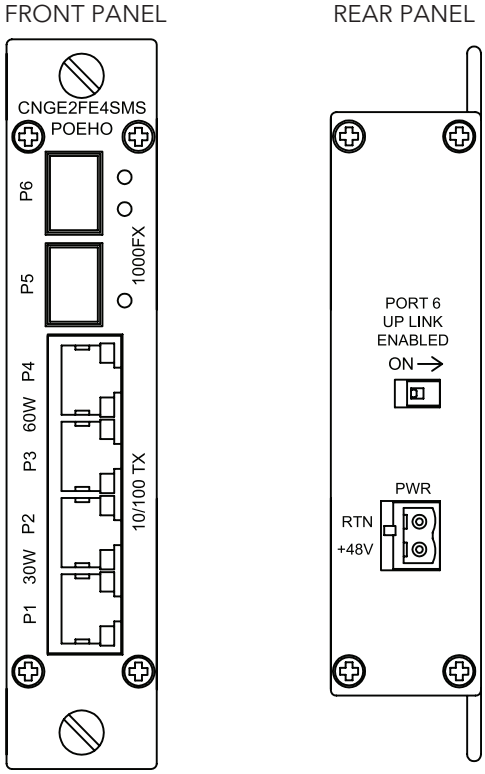

FIGURE 7 – UPLINK SWITCH SETTINGS

PORT 6
UP LINK
ENABLED
ON →

EFFECT	UPLINK
Uplink Enabled	ON
Uplink Disabled	OFF

FIGURE 8 – LED INDICATORS

	LINK (PORT 5, 6)	LINK (PORT 1 – 4)	POE (PORT 1 – 4)	POWER
SOLID	Link Up	Link Up	Power Suppled to PD	Power Applied
BLINKING	Data Activity	Data Activity	POE Negotiating	–
OFF	No Data Link	No Data Link	No Power Supplied	Power Not Applied

FIGURE 9 – APPLICATION DIAGRAM WITH MULTICAST TRAFFIC

IGMP Enabled on CWGE24MS, Uplink enabled on the units

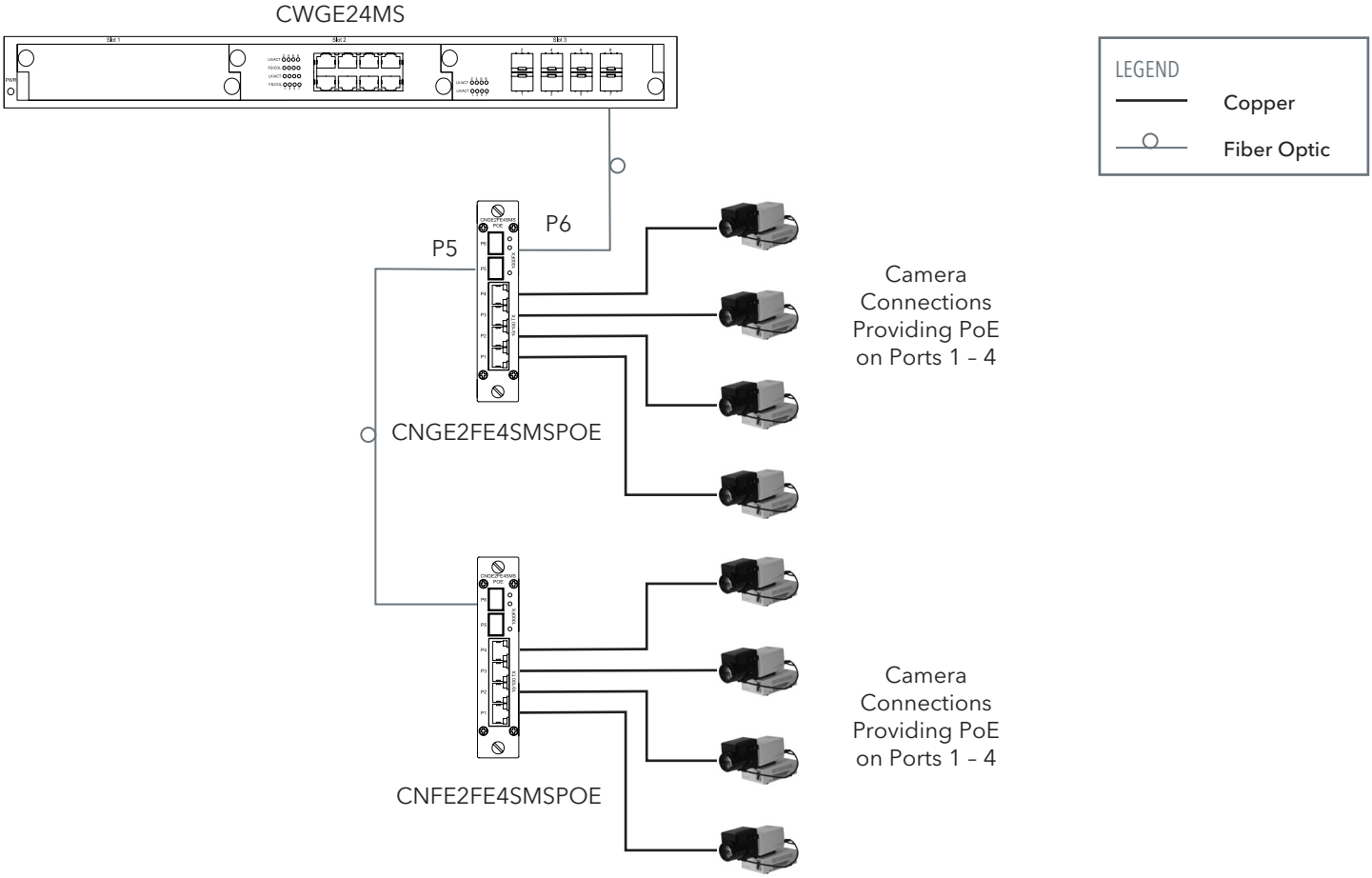

MECHANICAL INSTALLATION INSTRUCTIONS

INSTALLATION CONSIDERATIONS

This switch is supplied as a Standalone/Rack module. Units should be installed in dry locations protected from extremes of temperature and humidity.

NOTE: Although the POE units may be mounted inside a ComNet rack they cannot be powered from the built-in rack PSU; they must be powered by an external 48VDC PSU instead.

C1-US, C1-EU, C1-AU OR C1-CH CARD CAGE RACKS

CAUTION: Although the units are hot-swappable and may be installed without turning power off to the rack, ComNet recommends that the power supply be turned off and that the rack power supply is disconnected from any power source. **Note:** Remove electrical connector before installing in card cage rack.

1. Make sure that the card is oriented right side up, and slide it into the card guides in the rack until the edge connector at the back of the card seats in the corresponding slot in the rack's connector panel. Seating may require thumb pressure on the top and bottom of the card's front panel.

CAUTION: Take care not to press on any of the LEDs.

2. Tighten the two thumb screws on the card until the front panel of the card is seated against the front of the rack.

WARNING: Unit is to be used with a Listed Class 2 power supply.

IMPORTANT SAFEGUARDS:

A) Elevated Operating Ambient - If installed in a closed or multi-unit rack assembly, the operating ambient temperature of the rack environment may be greater than room ambient. Therefore, consideration should be given to installing the equipment in an environment compatible with the maximum ambient temperature (Tma) specified by the manufacturer.

B) Reduced Air Flow - Installation of the equipment in a rack should be such that the amount of air flow required for safe operation of the equipment is not compromised.

FIGURE A

Dimensions are for a standard ComNet™ one slot module

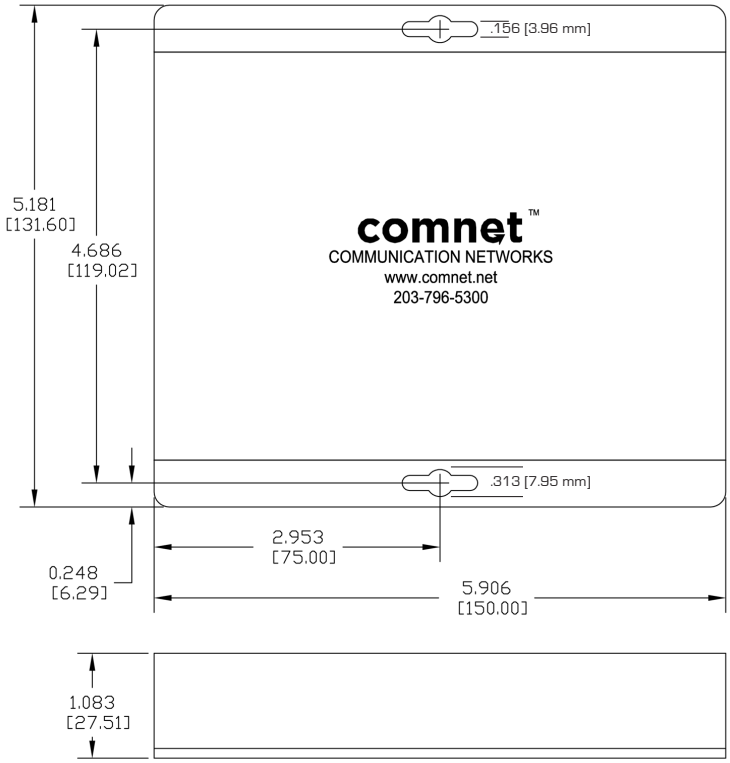

MADE IN THE USA

comnet Communication Networks

3 CORPORATE DRIVE | DANBURY, CT 06810 | USA
T: 203.796.5300 | F: 203.796.5303 | TECH SUPPORT: 1.888.678.9427 | INFO@COMNET.NET

8 TURNBERRY PARK ROAD | GILDERSOME | MORLEY | LEEDS, UK LS27 7LE
T: +44 (0)113 307 6400 | F: +44 (0)113 253 7462 | INFO-EUROPE@COMNET.NET

© 2014 Communications Networks Corporation. All Rights Reserved. "ComNet" and the "ComNet Logo" are registered trademarks of Communication Networks, LLC.