INSTALLATION MANUAL

Optera™ IMM-CM Corner Mount Adapter

C2288M-A (9/15)

Important Safety Instructions

Prior to installation and use of this product, the following warnings should be observed.

1. Installation and servicing should only be done by qualified service personnel and conform to all local codes.
2. Installation shall be done in accordance with all local and national electrical and mechanical codes utilizing only approved materials.
3. Use only installation methods and materials capable of supporting four times the maximum specified load.

DESCRIPTION

The IMM-CM corner mount adapter, paired with the WMVE-SR wall mount, is designed to install an Optera™ IMM Series environmental pendant mount camera to the outside corner of a structure.

PARTS LIST

Qty	Description
1	IMM-CM corner mount adapter
3	1/4-inch flat washers
3	Nylock nuts
1	Wire grommet (depending on cable entry method)
1	IMM-CM Installation manual

USER-SUPPLIED PARTS LIST

Qty	Description
1	WMVE-SR wall mount
1	IMM Series environmental pendant mount camera
4	Fasteners of a suitable size (minimum1/4-inch diameter) and appropriate for your mounting surface
1	Conduit fitting, 3/4-inch or 25 mm (depending on cable entry method)

INSTALLATION

1. Ensure that the mounting surface is capable of supporting the full load/weight of the IMM-CM corner mount adapter, WMVE-SR wall mount, and IMM Series pendant mount camera. The IMM-CM weighs 0.34 kg (0.75 lb).
2. Prepare your mounting surface:
   a. Drill holes in the mounting surface using the IMM-CM as a template.
   b. Attach the IMM-CM securely using four fasteners (not supplied) that are appropriate for the equipment and your load-bearing mounting surface.
3. Attach and secure the WMVE-SR to the three 1/4-inch studs on the IMM-CM using the three 1/4-inch flat washers (supplied) and three nylock nuts (supplied). Refer to Figure 4.
4. Attach the pendant back box to the WMVE-SR according to the instructions provided with the wall mount.
5. Select one of the three following options for your preferred cable/wire entry method:

   Conduit entry through bottom of WMVE-SR (refer to Figure 2):

   a. Remove the conduit plug from the WMVE-SR.
   b. Attach the 3/4-inch or 25 mm conduit fitting (not supplied) to the hole on the bottom of the WMVE-SR.
   c. Feed the cables through the conduit fitting.
   d. Attach the wire grommet (supplied) to the hole in the back of the IMM-CM.

Conduit entry through back of IMM-CM (refer to Figure 3):

a. Attach the 3/4-inch or 25 mm conduit fitting (not supplied) to the hole in the back of the IMM-CM.

b. Feed cables through the conduit fitting.

Wire entry through wire grommet attached to back of IMM-CM (refer to Figure 3):

a. Feed wires through the wire grommet (supplied).

b. Attach the grommet to hole in the back of the IMM-CM.

6. Install the IMM Series pendant mount camera (refer to the IMM Series Installation manual for more information).

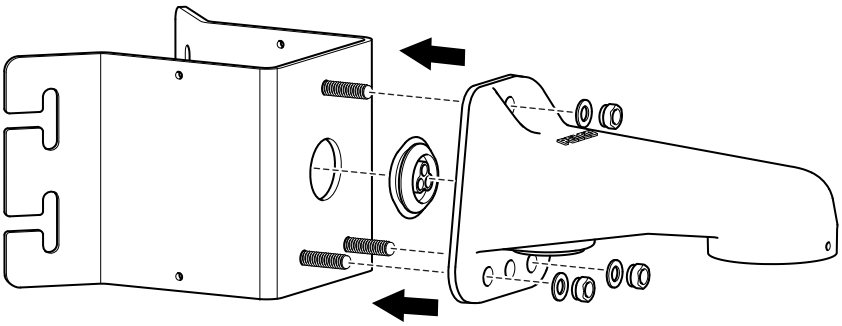

Figure 1. IMM-CM Corner Mount Adapter Assembly

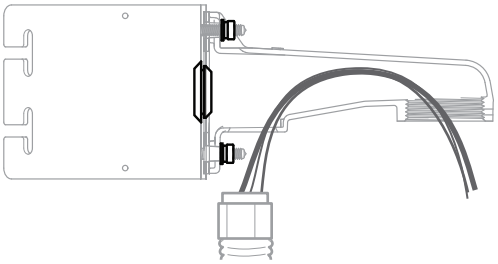

Figure 2. Conduit Entry Through Bottom

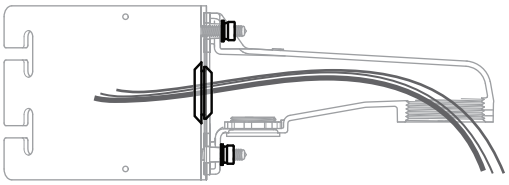

Figure 3. Conduit/Wire Entry Through Back

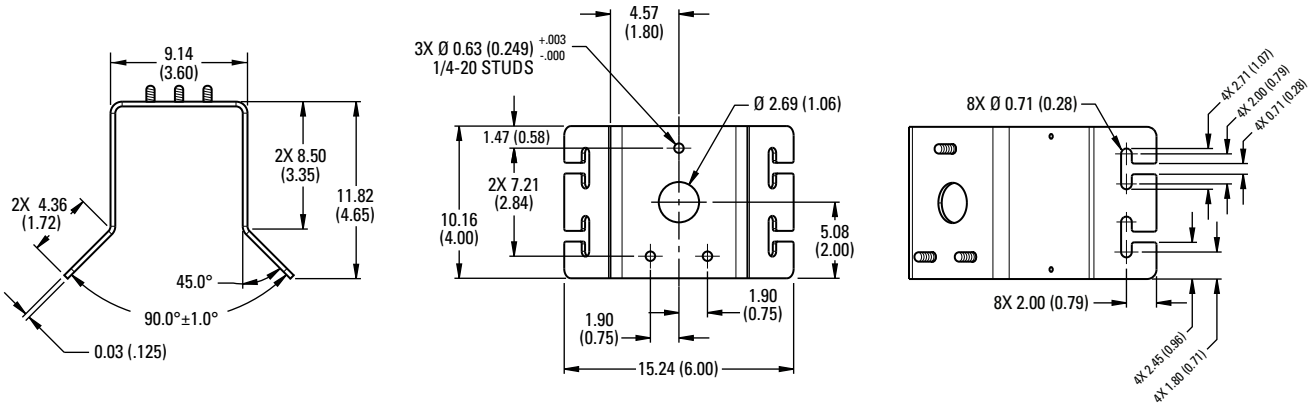

Figure 4. IMM-CM Dimensions

Warranty Statement

For information about Pelco's product warranty and thereto related information, refer to *www.pelco.com/warranty*.

Pelco, the Pelco logo, and other trademarks associated with Pelco products referred to in this publication are trademarks of Pelco, Inc. or its affiliates.
ONVIF and the ONVIF logo are trademarks of ONVIF Inc. All other product names and services are the property of their respective companies.
Product specifications and availability are subject to change without notice.

© Copyright 2015, Pelco, Inc.
All rights reserved.

Pelco by Schneider Electric 3500 Pelco Way Clovis, California 93612-5699 United States
USA & Canada Tel (800) 289-9100 Fax (800) 289-9150
International Tel +1 (559) 292-1981 Fax +1 (559) 348-1120
www.pelco.com www.pelco.com/community