SRXV-WMS

Wall-mount Bracket

Installation Guide

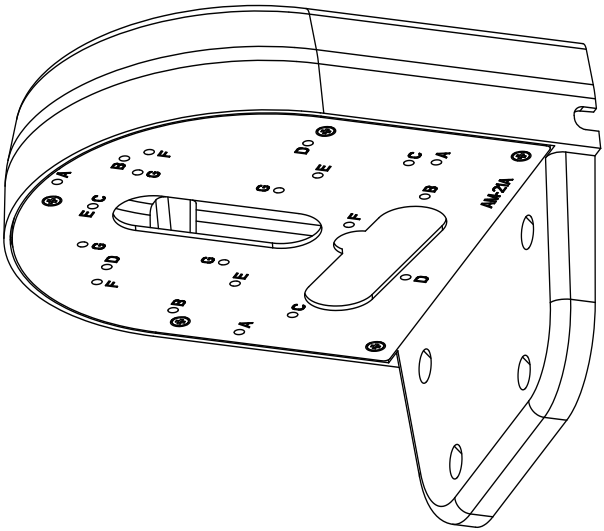

C6689M

PELCO®
a Motorola Solutions Company

IP Surveillance

For cabling and configuration details with each network camera, please refer to their documentation.

Refer to the table below for the description of the included screws:

Screw Description	Quantity	Applies to	
M4X10 Phillips pan head	4	All camera mounting holes	
M4X25XD9 Phillips pan head	4	Securing the bracket to wall	
Plastic anchors	4	Securing the bracket to wall	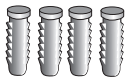

Dimensions

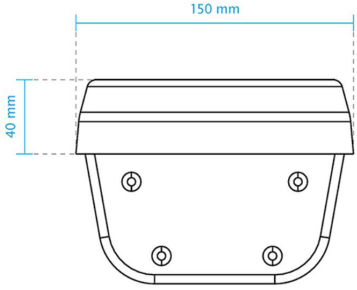

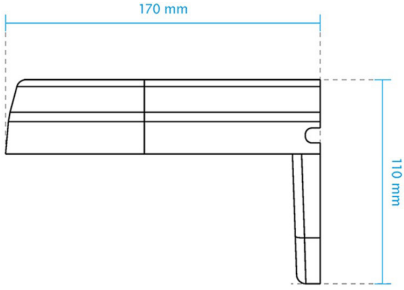

Installation

Mounting Hole Definitions

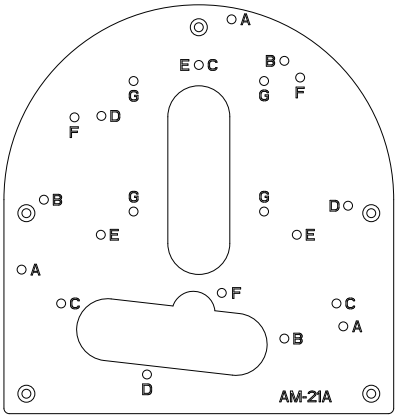

NOTE: You may need tools like hammer, chisel, or a flat-bade screwdriver to remove the knock-out tab on the secondary routing hole.

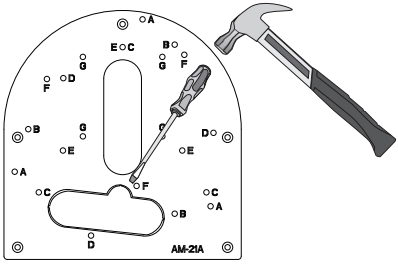

Above are the locations of different groups of mounting holes for matching different cameras:

Hole Type	Applicable Cameras	Screw	No. of screws
C	IMV Series	M4X10	3
E	ITV Series	M4X10	3
F	IJV Series		
G	IFV Series		4

NOTE:

1. It is presumed that this wall-mount bracket is installed with a hole drilled on the wall for routing power lines, DI/DO, and Ethernet cables.
2. Route cables before you secure the wall-mount bracket to a wall.
3. For details on the cable connections with each camera, please refer to their Quick Installation Guide.

IMPORTANT!

The screws and mounting surface must be able to support a weight of 4 kg.

NOTE:

You will need to pass the cables through the waterproof connectors, and then use a crimping tool to connect the cable wires to an RJ45 connector.

Wall Mount Installation

Below is a sample procedure using wall mount bracket:

1. Determine a hard surface wall location, and use the four mounting holes on the bracket to mark the positions where holes will be drilled to secure the bracket.

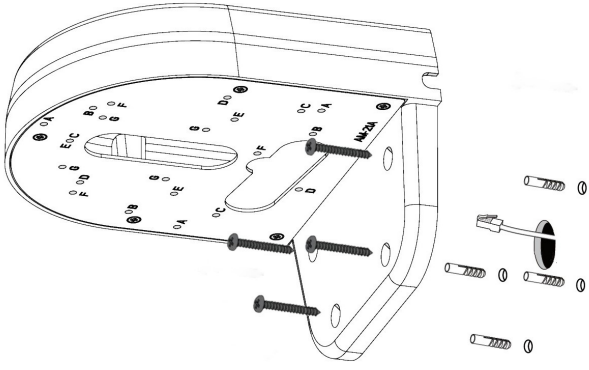

2. Drill holes on the wall for securing the bracket and for routing cables.
3. Route cables through the wall and bracket.
4. Secure the wall mount bracket to the wall using the included screws and plastic anchors.
5. Secure the camera to the bracket using the included screws.
6. Connect power lines and cables to the camera.
7. Proceed with initial setup such as enabling network access, focus tuning, or zooming. When done, secure the outer dome cover if applicable.

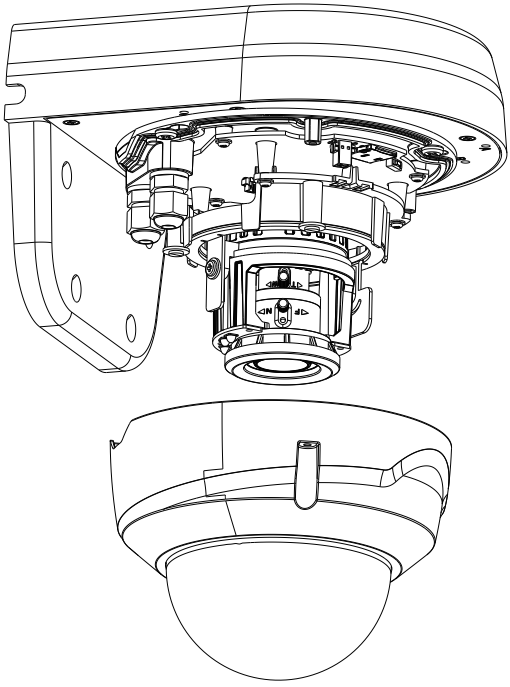
AF
MF

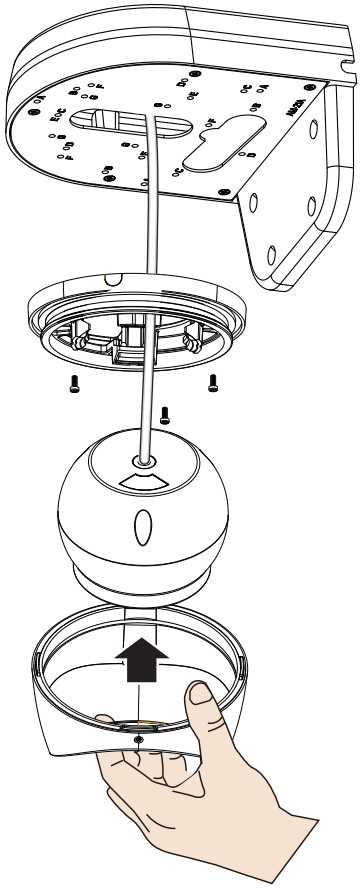

Pelco, Inc.
625 W. Alluvial Ave., Fresno, California 93711
United States (800) 289-9100 Tel, (800) 289-9150 Fax
International
+1 (559) 292-1981 Tel, +1 (559) 348-1120 Fax
www.pelco.com