SmartCell

Wireless Remote Indicator
Installation Guide

Part number	Product description
SC-62-0210-0001-99	SmartCell Wireless Remote Indicator
SC-62-0211-0001-99	SmartCell Wireless Remote Indicator (Fire Detection Indicator Text)

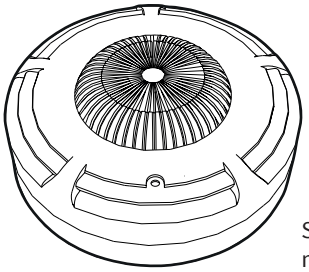

SC-62-0210-0001-99
model shown

1 Pre installation

Installation must conform to applicable local installation codes and should only be installed by a fully trained competent person.

The use of a non-metallic spacer should be considered if mounting the device on to a metal surface.

This device contains electronics that may be susceptible to damage from Electrostatic Discharge (ESD). Take appropriate precautions when handling electronic boards.

To ensure correct operation, products must be used within the specified environmental operating conditions.

2 Components

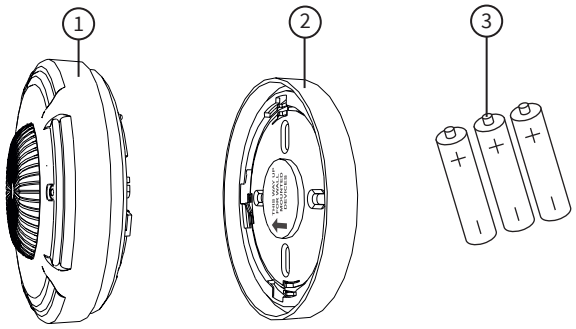

① Wireless Remote Indicator ② Mounting plate

③ Batteries *(not included in some regions*)*

*When batteries are not supplied, only fit specified batteries.

3 Remove mounting plate

- Remove the mounting plate by turning the device ANTICLOCKWISE, to release it from the mounting plate.

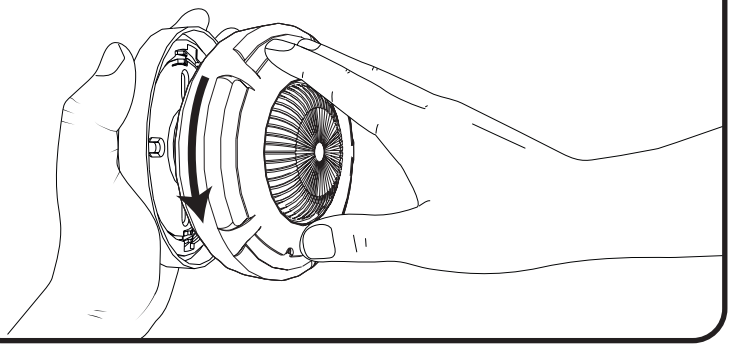

4 Fix mounting plate

- When fixing to the wall, all four fixing positions should be used to ensure a firm fixing.
- Where existing electrical mounting boxes are present, two fixing positions may be used.
- Use suitable fasteners and fixings.
- Observe the orientation marking!

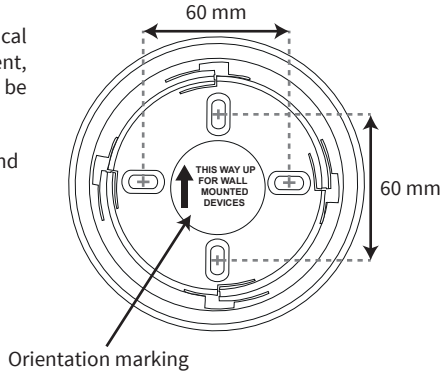

5 Fit batteries

- When fitting / replacing batteries, observe correct polarity, using only specified batteries.

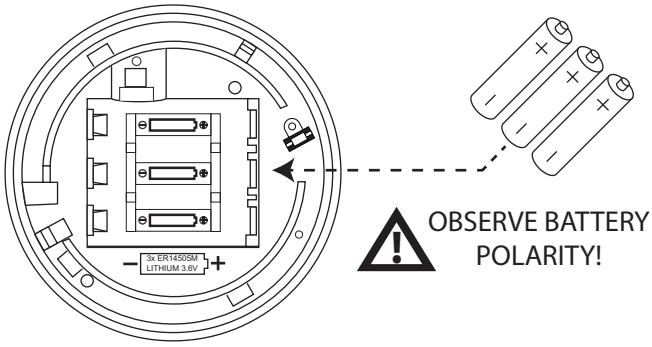

6 Configuration

The device must now be added (programmed) to the control panel.

Method 1	Method 2	Method 3
Device powering	Magnet application	Via computer

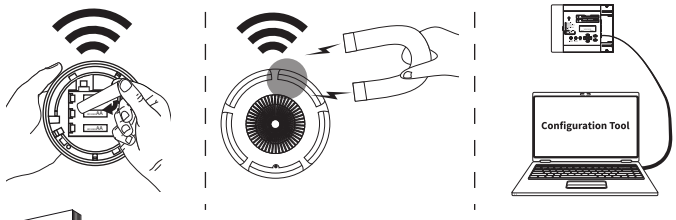

Refer to the programming manual (TSD155) for full programming details.

©2021 EMS Ltd. All rights reserved.

MK353-0001-99 (Issue 2) 04/11/2021 AJM

7 Optional device locking

- The device includes an optional locking mechanism.
- Remove the thin section of plastic shown below.
- Once locked, the Allen key will be required to unlock the device.

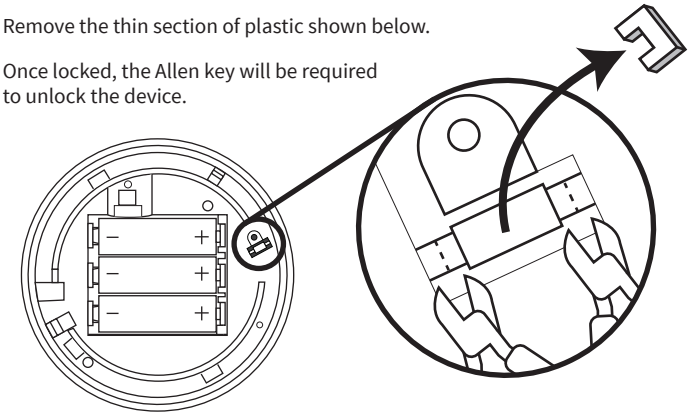

8 Completing the installation

- Reassemble the device as shown below.

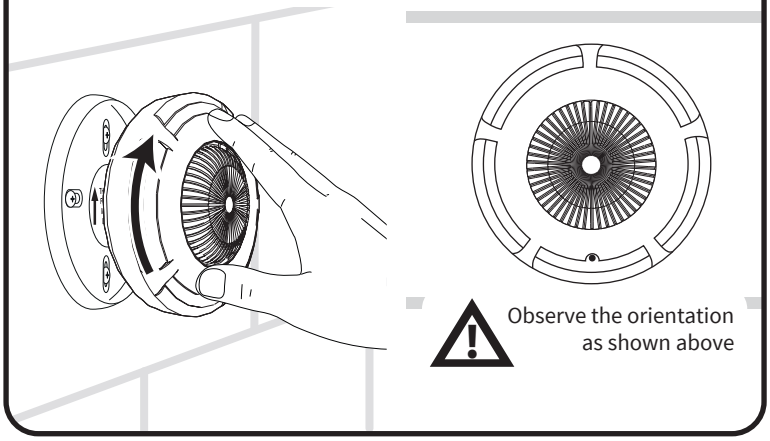

Device unlocking

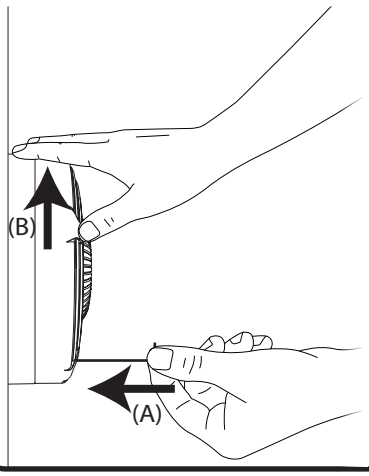

- If the device has been locked, an Allen key will be required for unlocking.
- Depress the locking mechanism, by inserting the Allen key, or similar, into the device's cavity and pushing (A).
- Simultaneously twist the device anti-clockwise to release (B).

⚠ IMPORTANT

- The device should be tested upon installation, in accordance with local requirements.
- Testing should only be carried out by a fully trained competent person.

Specification

Operating temperature	-10 to +55 °C
Storage temperature With batteries Without batteries	 -10 to +30 °C -10 to +55 °C
Humidity	0 to 95% noncondensing
Location	Type A: for indoor use
IP rating	IP21C
Supply	3 x ER14505M 3.6 V lithium thionyl chloride batteries (Fanso or Titus)

CAUTION!

- This is a life safety product. Only use manufacturer approved battery types. Failure to do so may result in damage to the product.
- DO NOT mix batteries of different type or age.
- When replacing batteries; remove all old batteries before fitting replacements.

Operating voltage	2.7 to 3.65 VDC ⎓
Current consumption	0.1 to 400 mA
Power consumption	1.46 W max.
Operating frequency	868 MHz
Output transmitter power	14 dBm / 25 mW
Signalling protocol	X5
Dimensions (Ø x D)	110 x 39 mm

Regulatory information

Manufacturer	Carrier Manufacturing Polska Sp. Z o.o. Ul. Kolejowa 24. 39-100 Ropczyce, Poland
Year of manufacture	See devices serial number label
Certification	CE 21
Certification body	**0905**
CPR DoP	0359-CPR-202116
Approved to	EN54-13:2005. Fire detection and fire alarm systems. Part 13: compatibility assessment of system components. EN54-25:2008. Incorporating corrigenda september 2010 and march 2012. Fire detection and fire alarm systems. Part 25: components using radio links.
European Union directives	EMS declares that the radio equipment type SmartCell Wireless Remote Indicator is in compliance with Directive 2014/53/EU. The full text of the EU declaration of conformity is available at the following internet address: www.mysmartcell.com
	2012/19/EC (WEEE directive): Products marked with this symbol cannot be disposed of as unsorted municipal waste in the European Union. For proper recycling, return this product to your local supplier upon purchase of equivalent new equipment, or dispose of it at designated collection points. For more information see www.recyclethis.info Dispose of your batteries in an environmentally friendly manner according to your local regulations.

©2021 EMS Ltd. All rights reserved.