mm [inch]

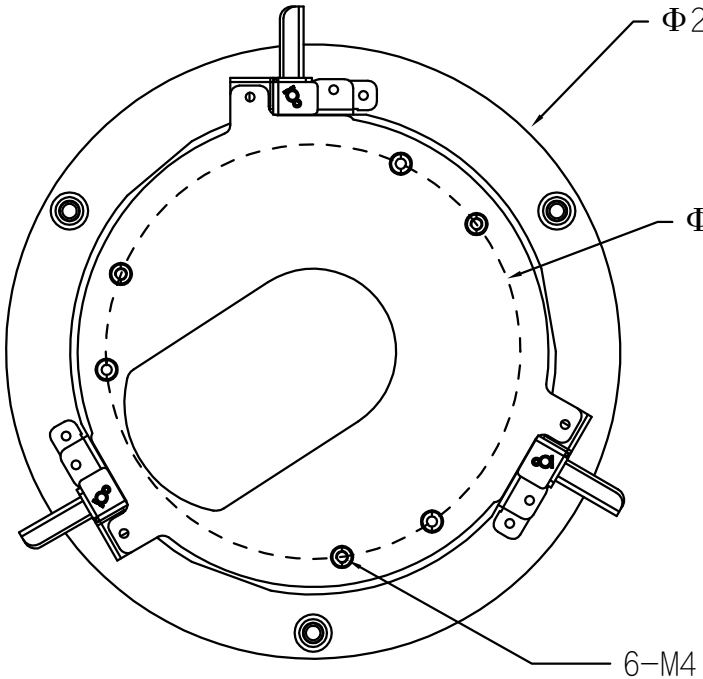
Φ211.5 [Φ8.33]
Φ140.0 [Φ5.51]
6-M4

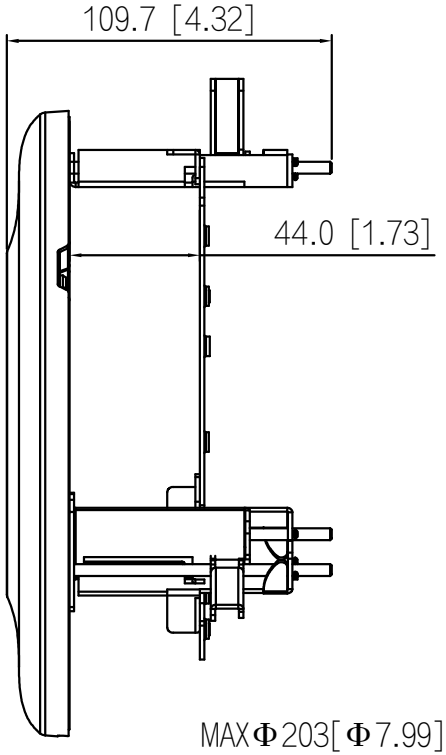
109.7 [4.32]
44.0 [1.73]

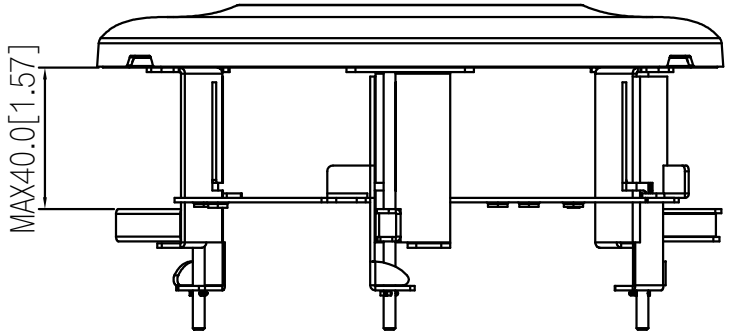
MAX40.0[1.57]

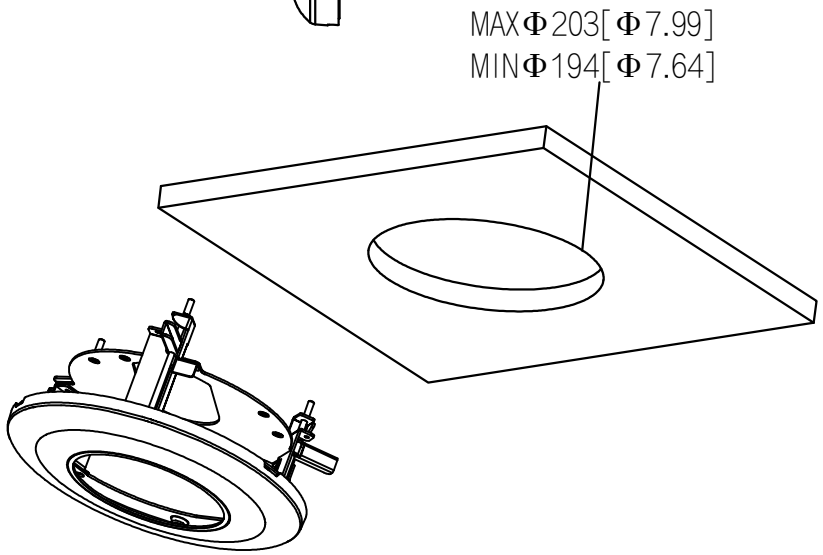
MAXΦ203[Φ7.99]
MINΦ194[Φ7.64]